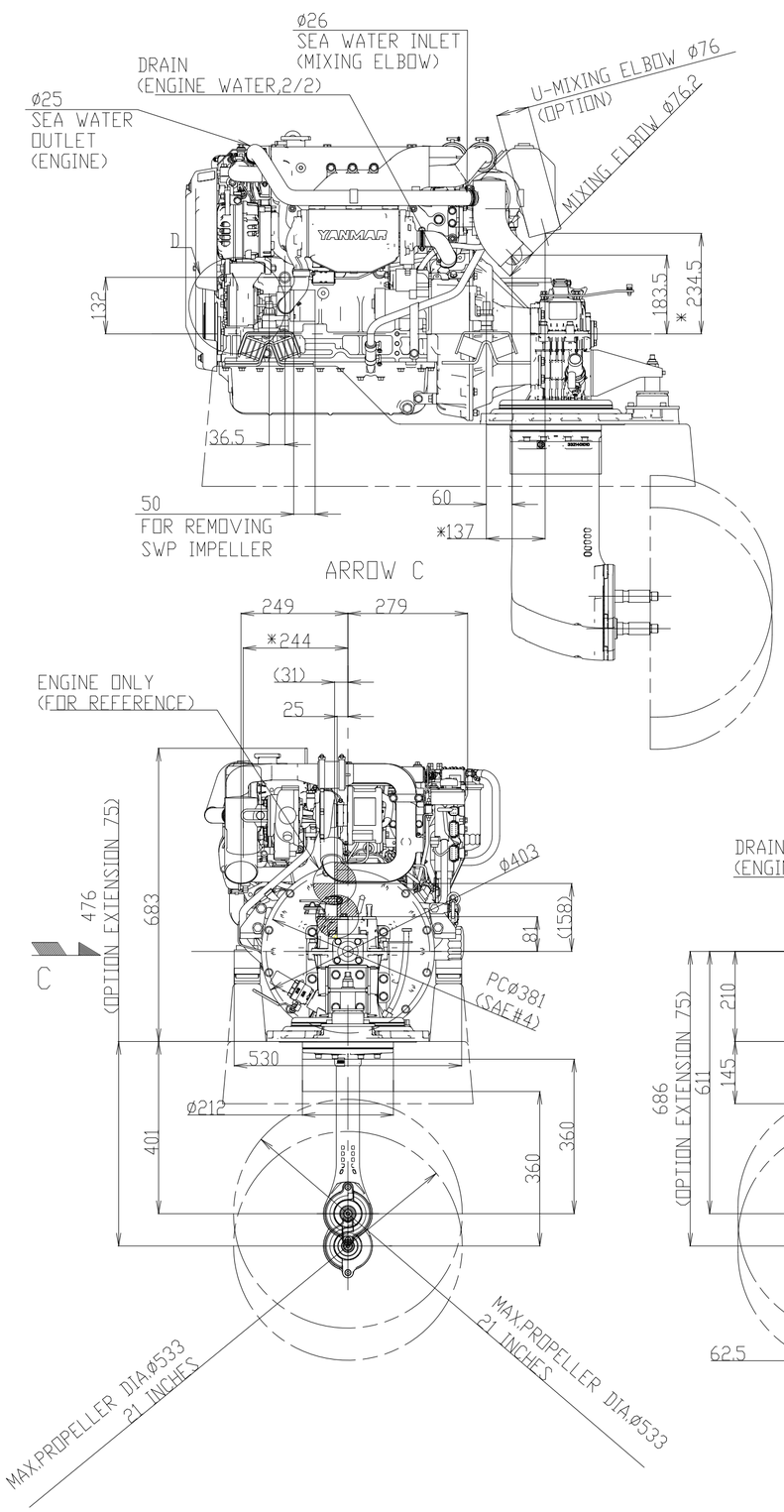

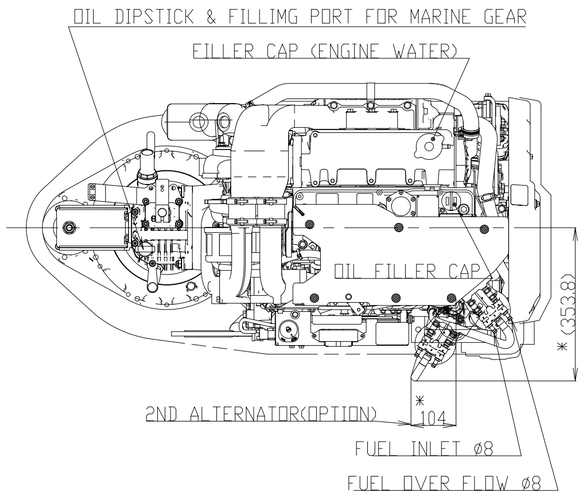

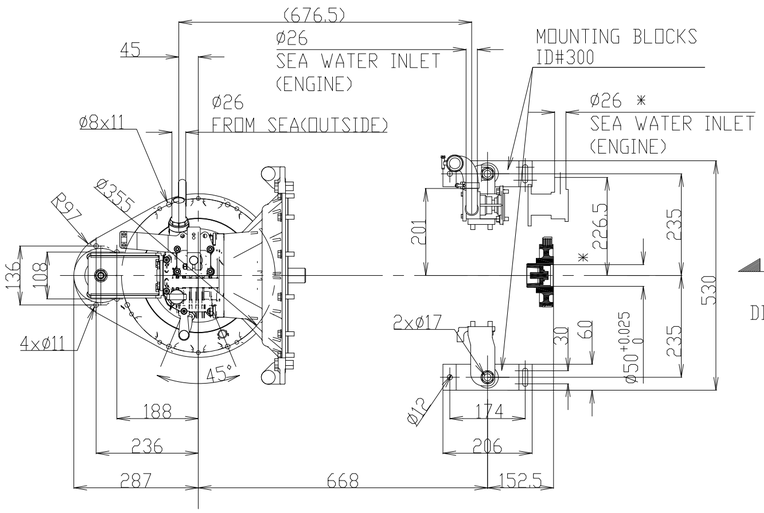

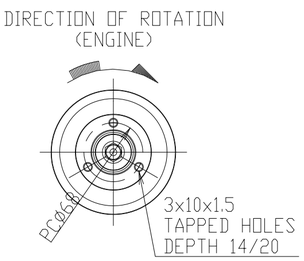

DETAIL OF PULLEY
SCALE 1:5
ARROW A

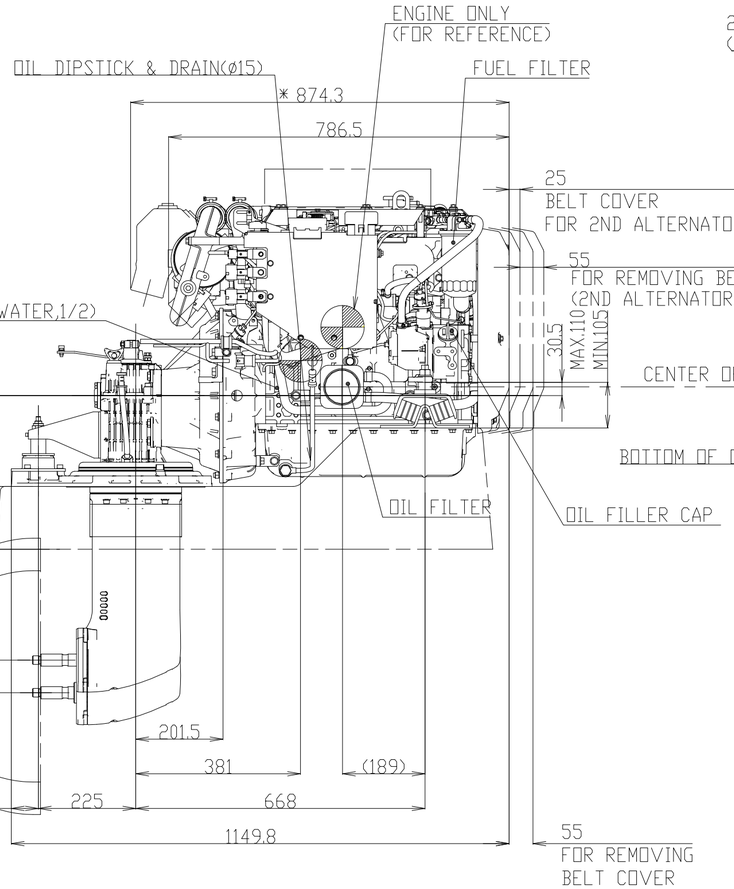

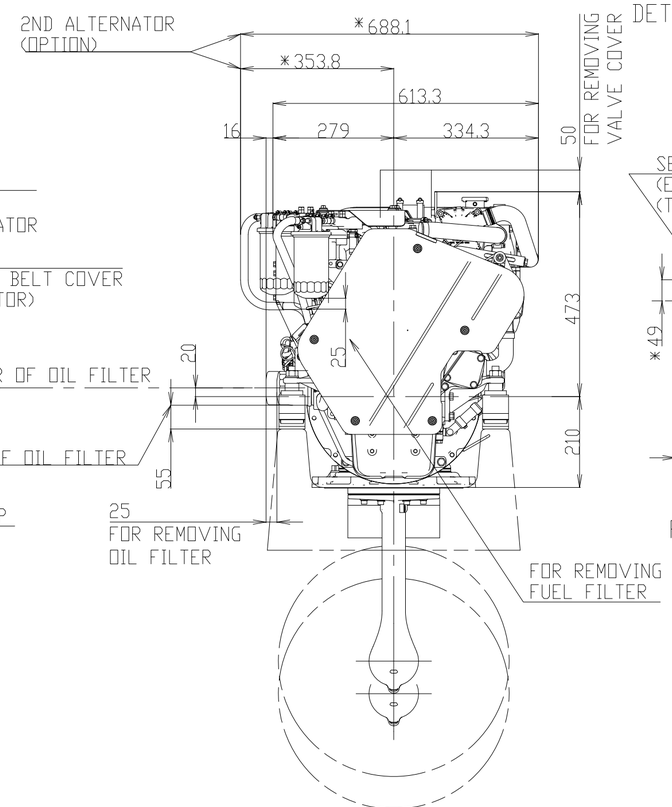

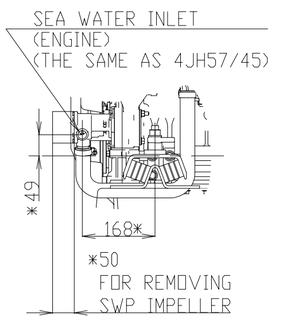

PART D
FRONT MOUNT SWP
(OPTION)

NOTE
1.MOUNTING BLOCKS ARE COMPRESSED ABOUT 4mm BY ENGINE WEIGHT.
DIMENSIONS OF MOUNTING BLOCK IN THIS DRAWING ARE WITHOUT ANY DEFORMATION.
2.MOUNTING BLOCKS ARE EQUIPPED FOR STANDARD ACCESSORY.
3.THE FIGURES MARKED WITH * SHOW THE DIMENSIONS WITH
U-MIXING ELBOW, OR OPTIONAL PARTS.
4. ⊕SHOWS THE CENTER OF GRAVITY.

SPECIFICATIONS		
Model		4JH80
Continuous Power(ISO 8665) kW/min^{-1}		53.5 / 3101
Fuel Stop Power	Propeller shaft(ISO 8665) kW/min^{-1}	---
	Crankshaft(ISO 8665) kW/min^{-1}	58.8 / 3200
Reduction ratio		2.23 | 2.49 | ---
Dry mass kg		Approx.274
Direction of rotation at Propeller (Forward)		BOTH

SCALE	NAME	MODEL
1:10	OUTLINE	OUTLINE,4JH80-SD60
DATE	ORIGINAL DRAWING NUMBER	REVISION
17-3-2014	B2-29676-0061	0

YANMAR

Copyright(C) YANMAR CO.,LTD. All right reserved.